RB520S-40

40V-0.2A Schottky Barrier Diode

RB520S-40 Schottky Barrier Diode

SOD-523

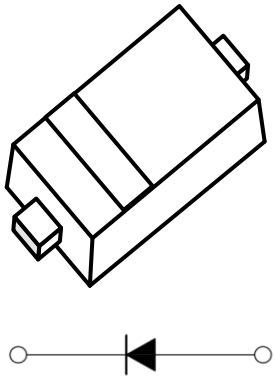

Feature

- Small surface mounting type
- Low IR
- High Reliability

MARKING:

ABSOLUTE MAXIMUM RATINGS (T_A=25℃ unless otherwise noted)

Parameter	Symbol	Value	Unit
DC Reverse Voltage	V_R	40	V
Mean Rectifying Current	I_O	0.2	A
Non-repetitive Peak Forward Surge Current @ t=8.3ms	I_{FSM}	1	A
Power Dissipation	P_D	0.15	W
Thermal Resistance from Junction to Ambient	$R_{\theta JA}$	667	℃/W
Junction Temperature	T_J	125	℃
Storage Temperature Range	T_{STG}	-55 ~ +150	℃

ELECTRICAL CHARACTERISTICS (T_A=25℃ unless otherwise noted)

Parameter	Symbol	Test Condition	Min	Type	Max	Unit
Reverse Voltage	V_{BR}	I_R =100μA	40			V
Forward Voltage	V_F	I_F =10mA			0.39	V
		I_F =100mA			0.55	V
Reverse Current	I_R	V_R =10V			1	μA
		V_R =40V			10	μA

Typical Characteristics

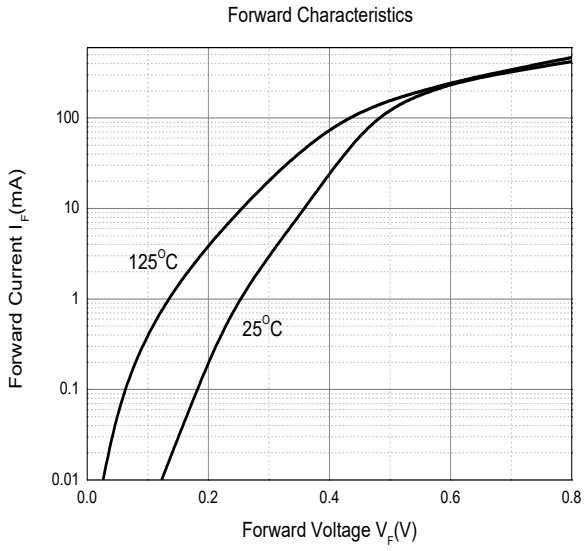

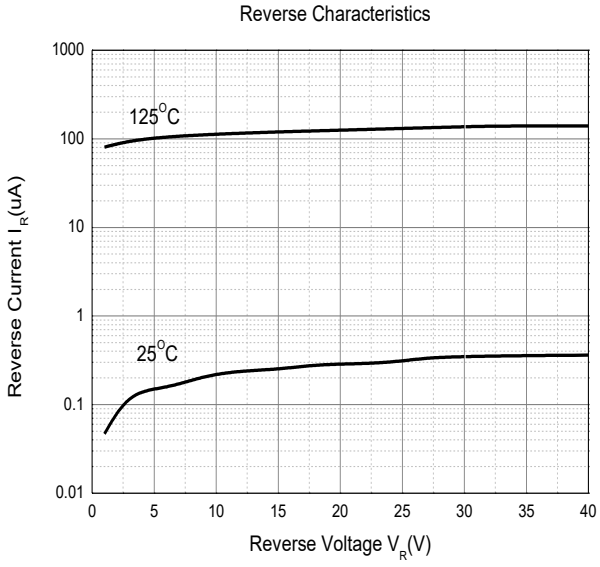

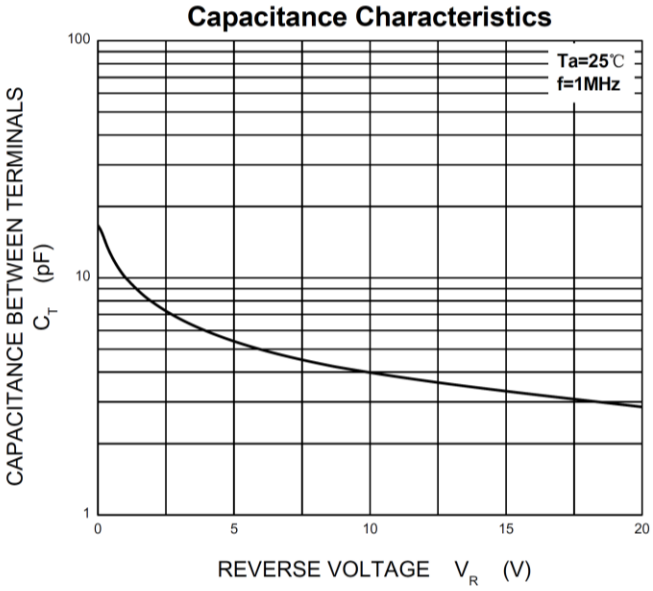

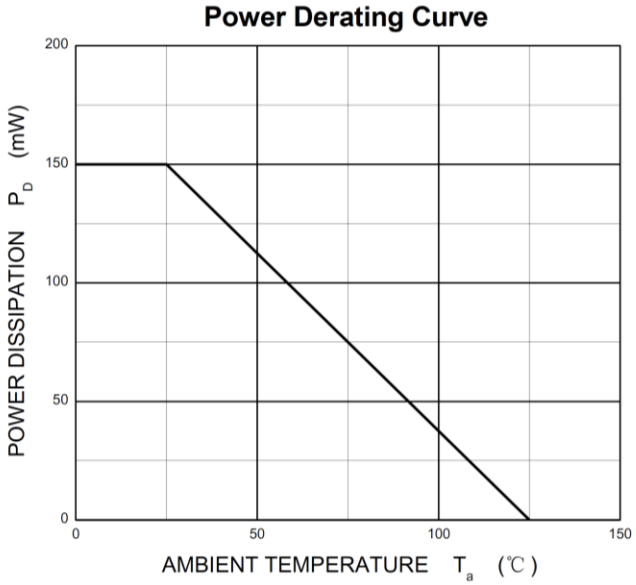

SOD-523 Package Outline Dimensions

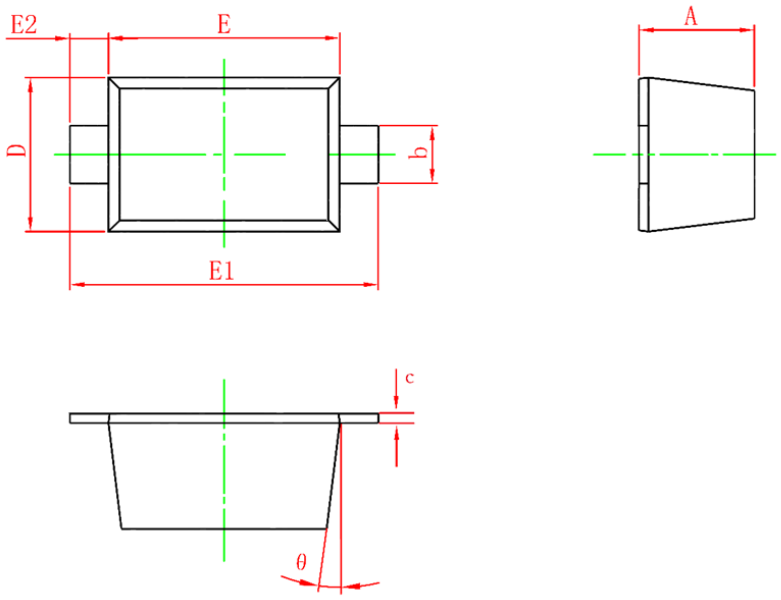

Symbol	Dimensions In Millimeters		Dimensions In Inches	
	Min.	Max.	Min.	Max.
A	0.470	0.770	0.018	0.030
b	0.250	0.350	0.010	0.014
c	0.080	0.150	0.003	0.006
D	0.750	0.850	0.030	0.033
E	1.100	1.300	0.043	0.051
E1	1.500	1.700	0.059	0.067
E2	0.200REF		0.008REF	
θ	7°REF		7°REF	

Attention：

- GreenPower Electronics reserves the right to improve product design function and reliability without notice.
- Any and all semiconductor products have certain probability to fail or malfunction, which may result in personal injury, death or property damage. Customers are solely responsible for providing adequate safe measures when design their systems.
- GreenPower Electronics products belong to consumer electronics or other civilian electronic products.